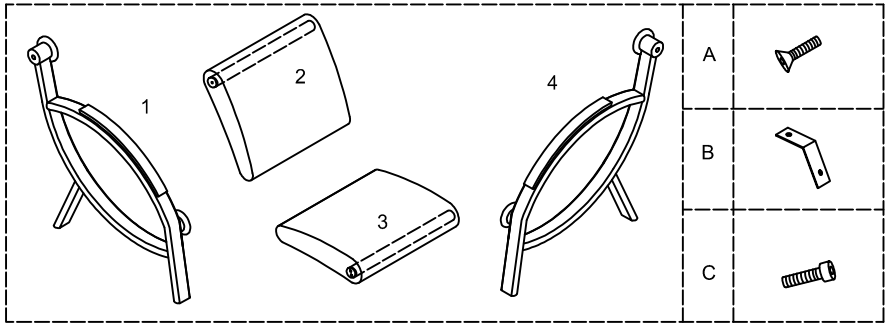
1
2
3
4
A
B
C

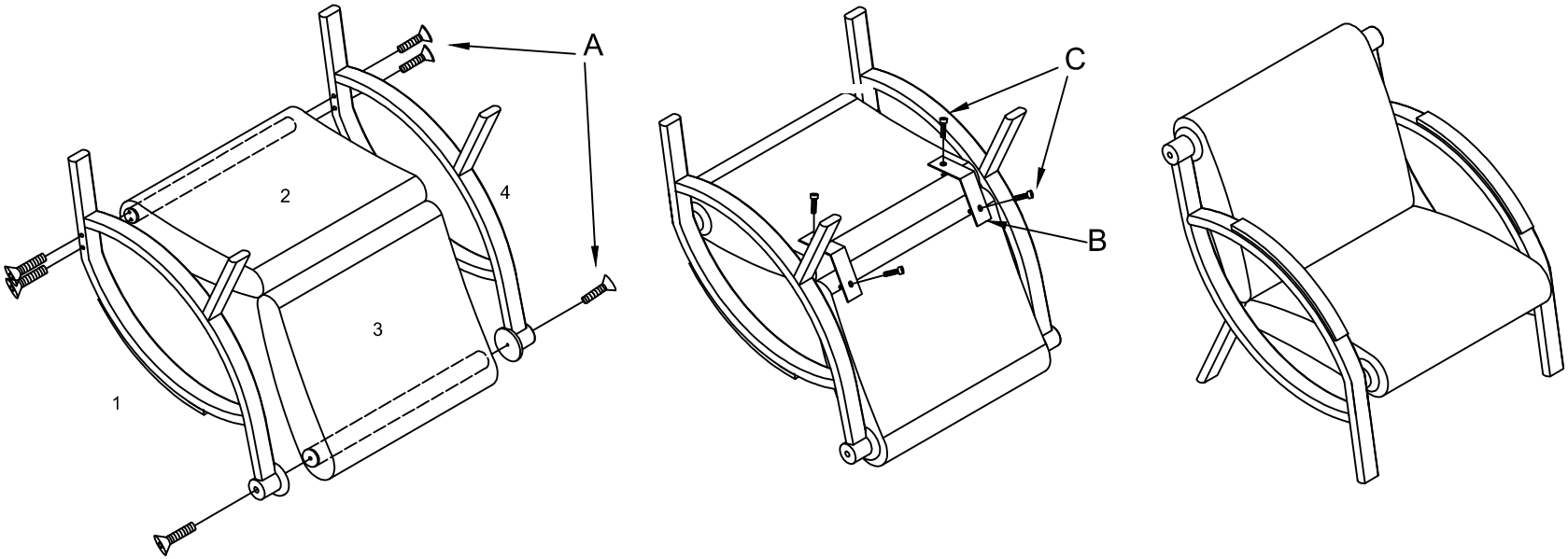
A
B
C
1
2
3
4