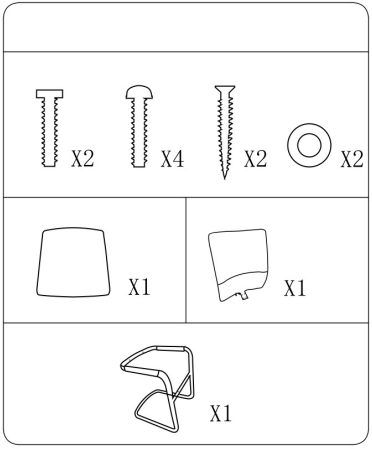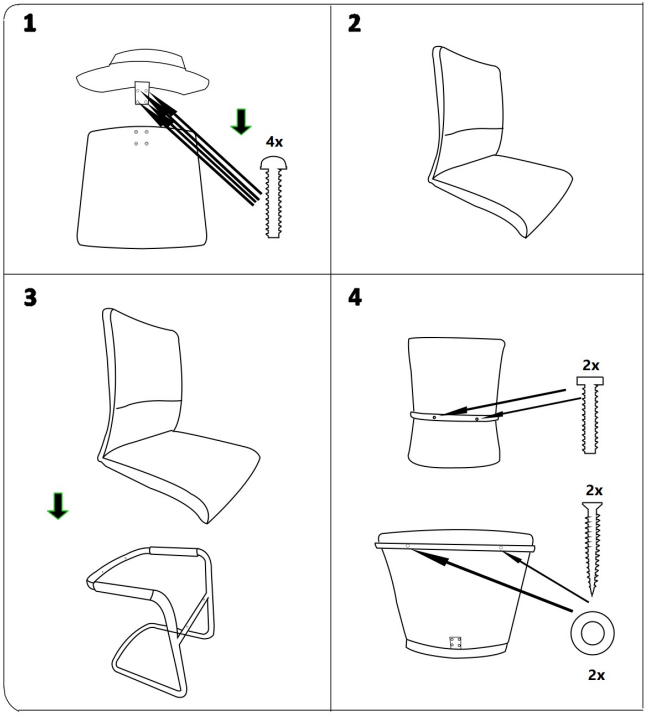B2Bpartner