B2Bpartner

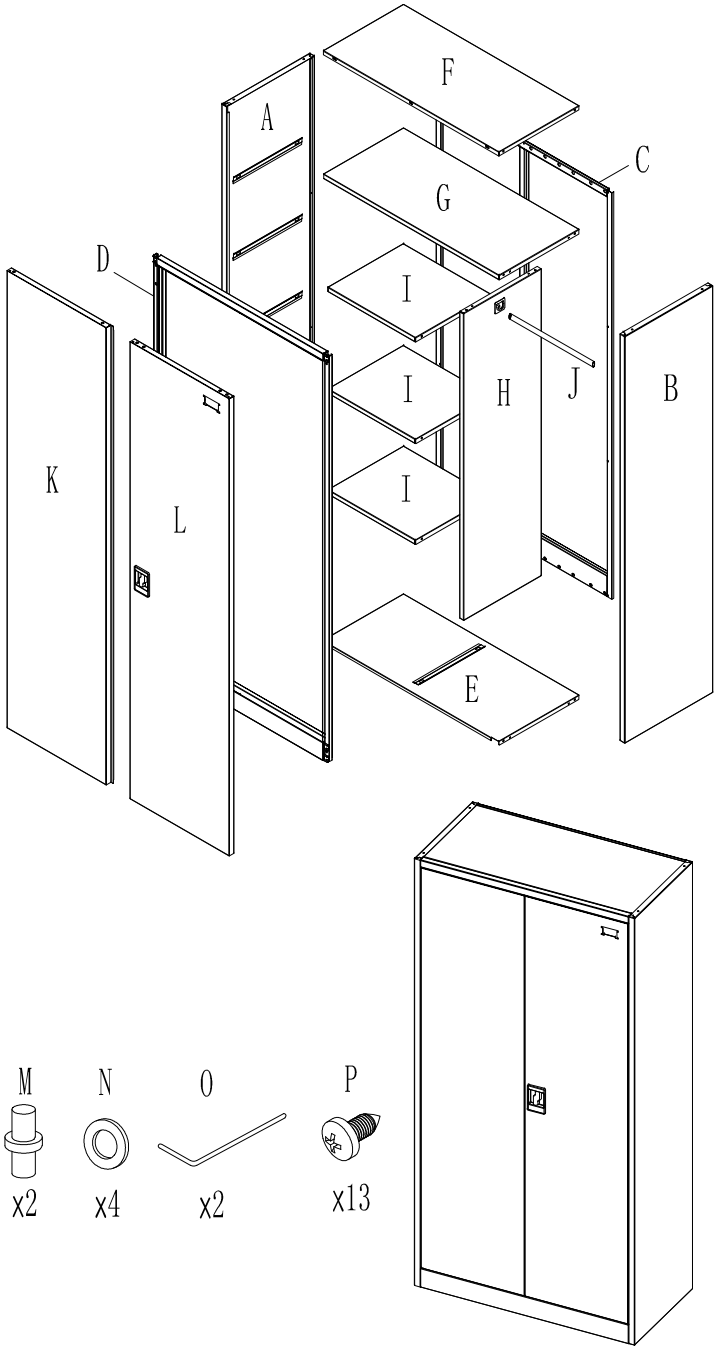
A
F
C
G
D
I
I
H
J
B
K
L
I
E
M
N
O
P
x2
x4
x2
x13

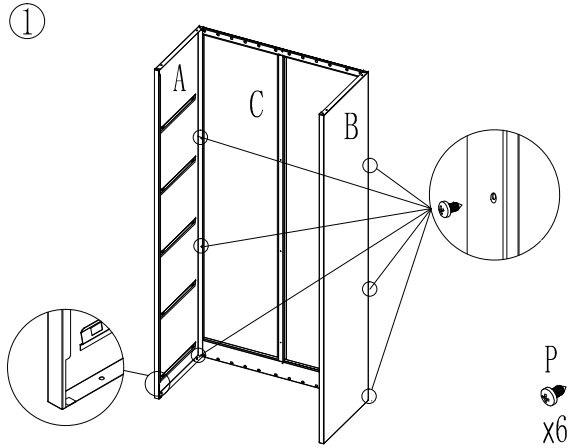
①
A
C
B
P
x6

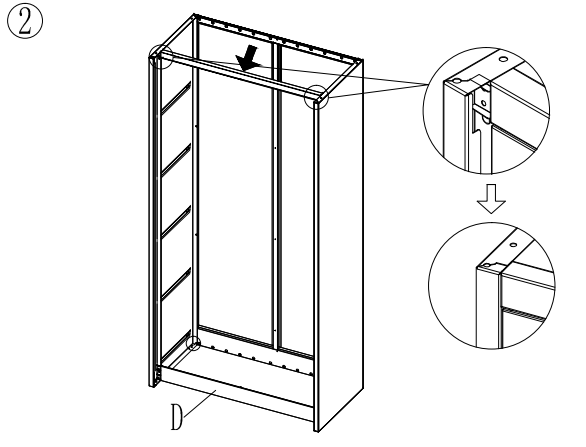
②
D

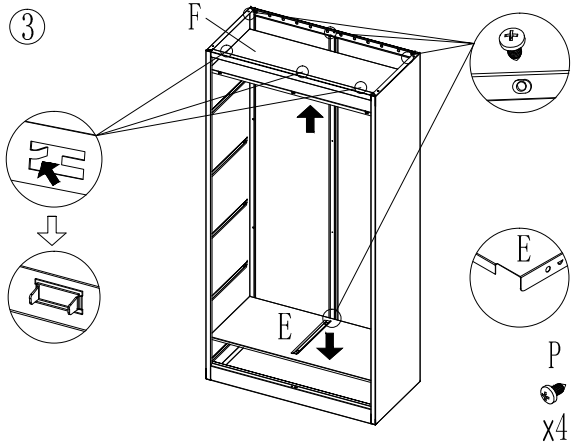
③
F
E
E
P
x4

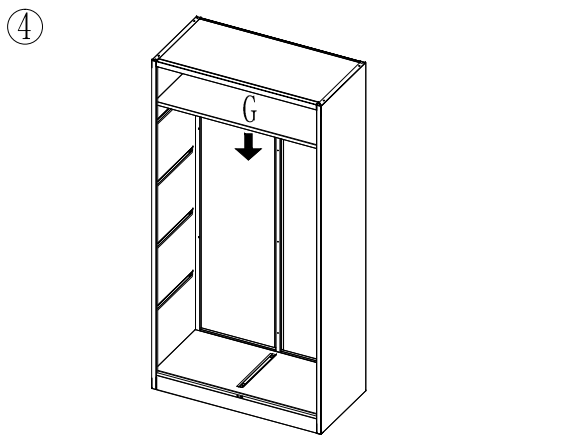
④
G

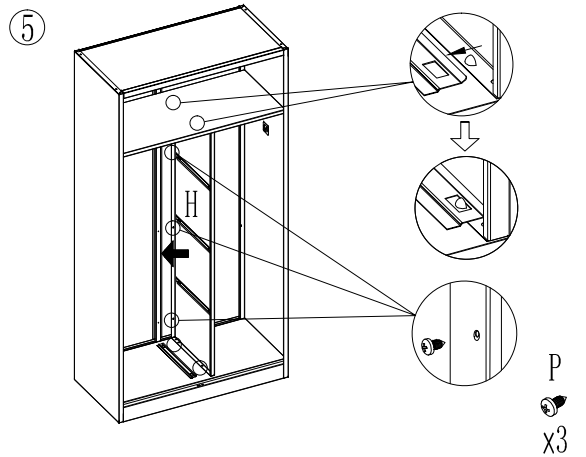
⑤
H
P
x3

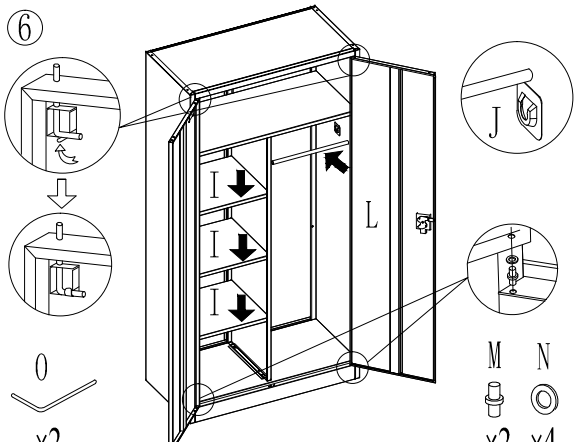
⑥
J
I
I
I
L
O
x2
M
N
x2
x4