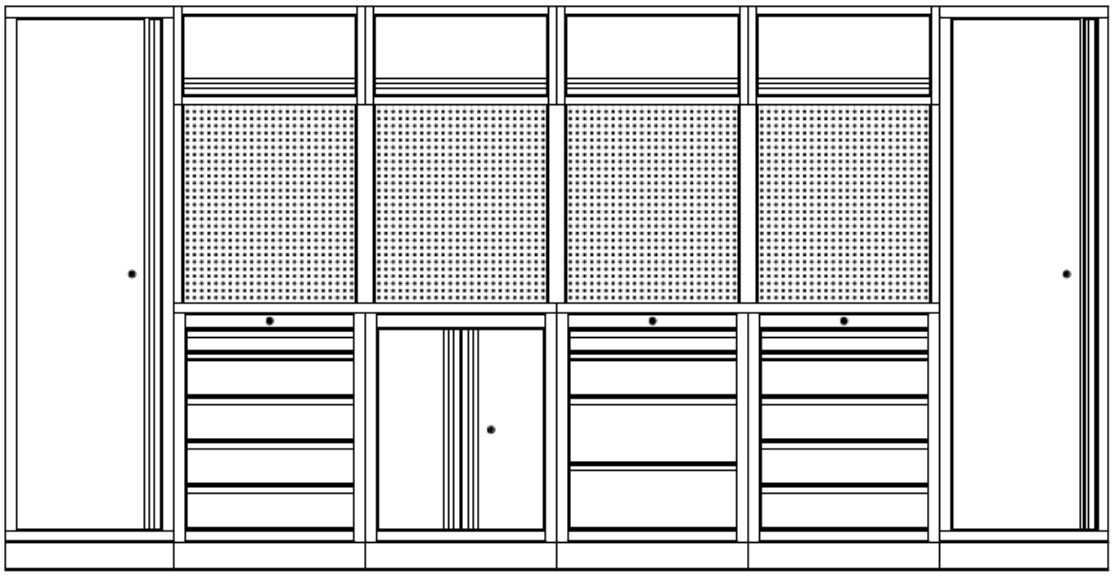

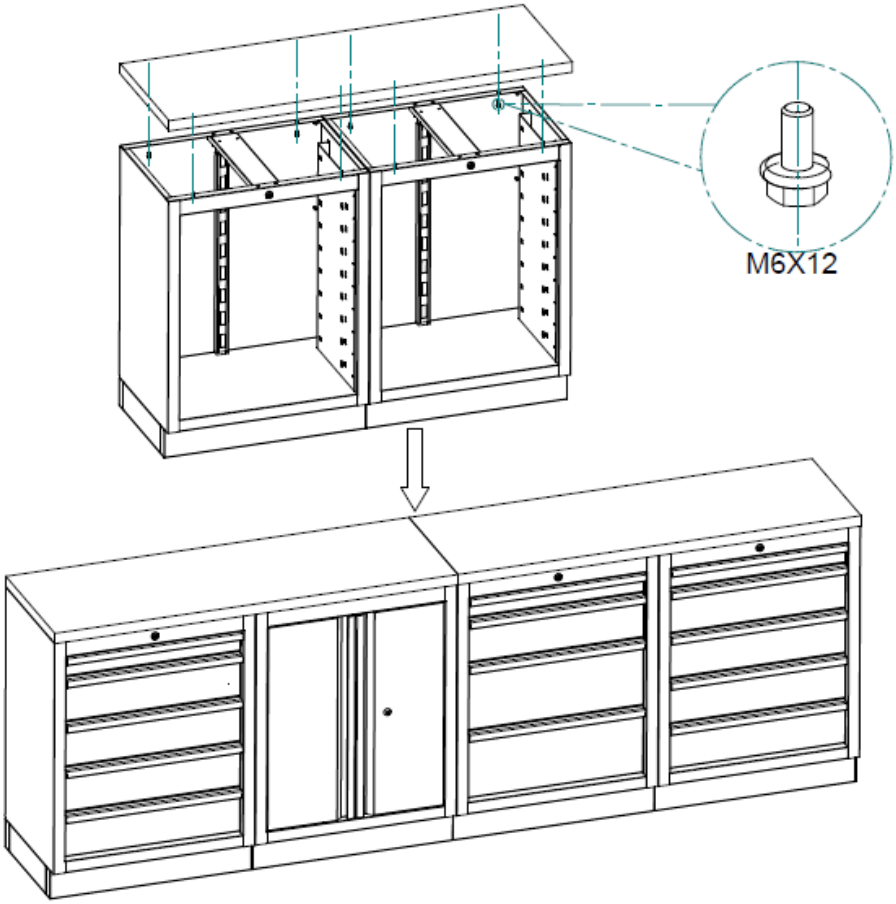
M6X12

B2Bpartner

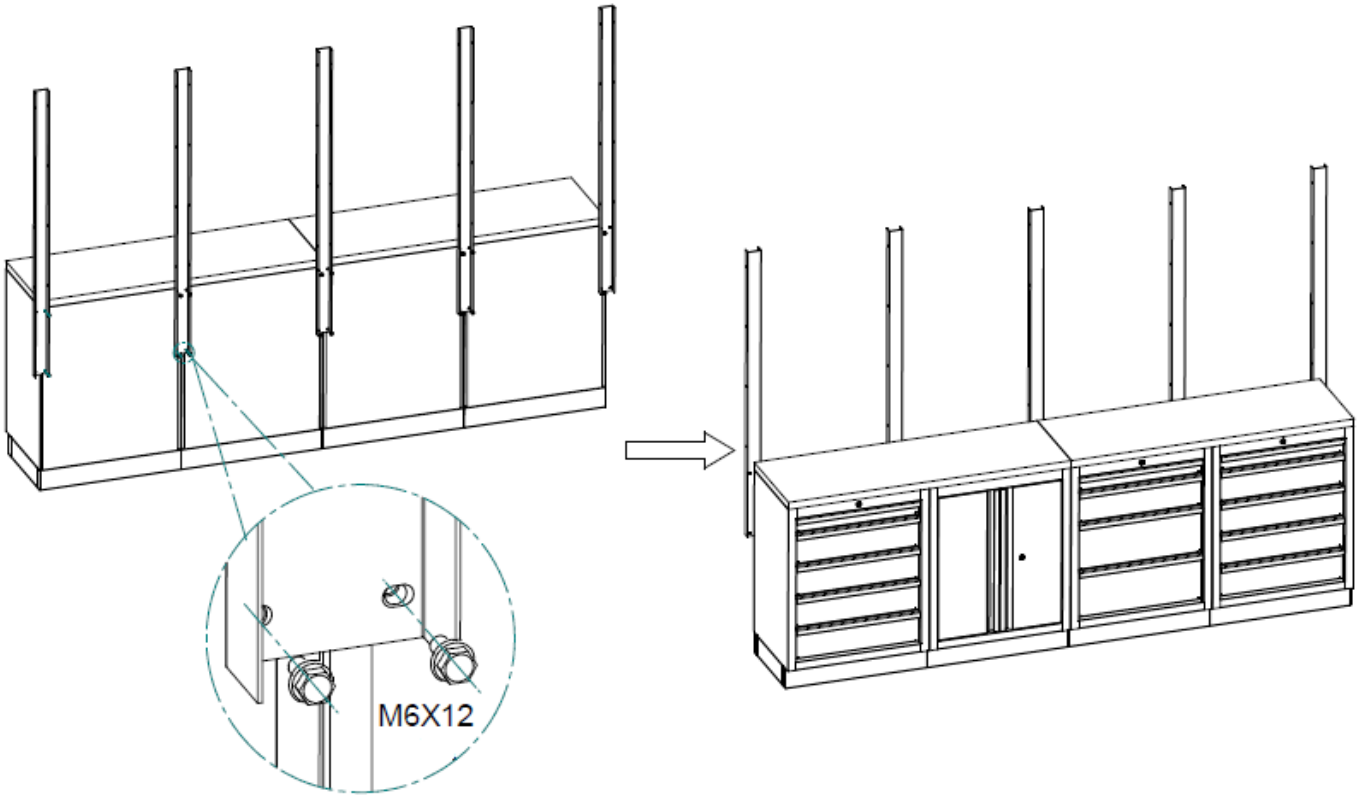

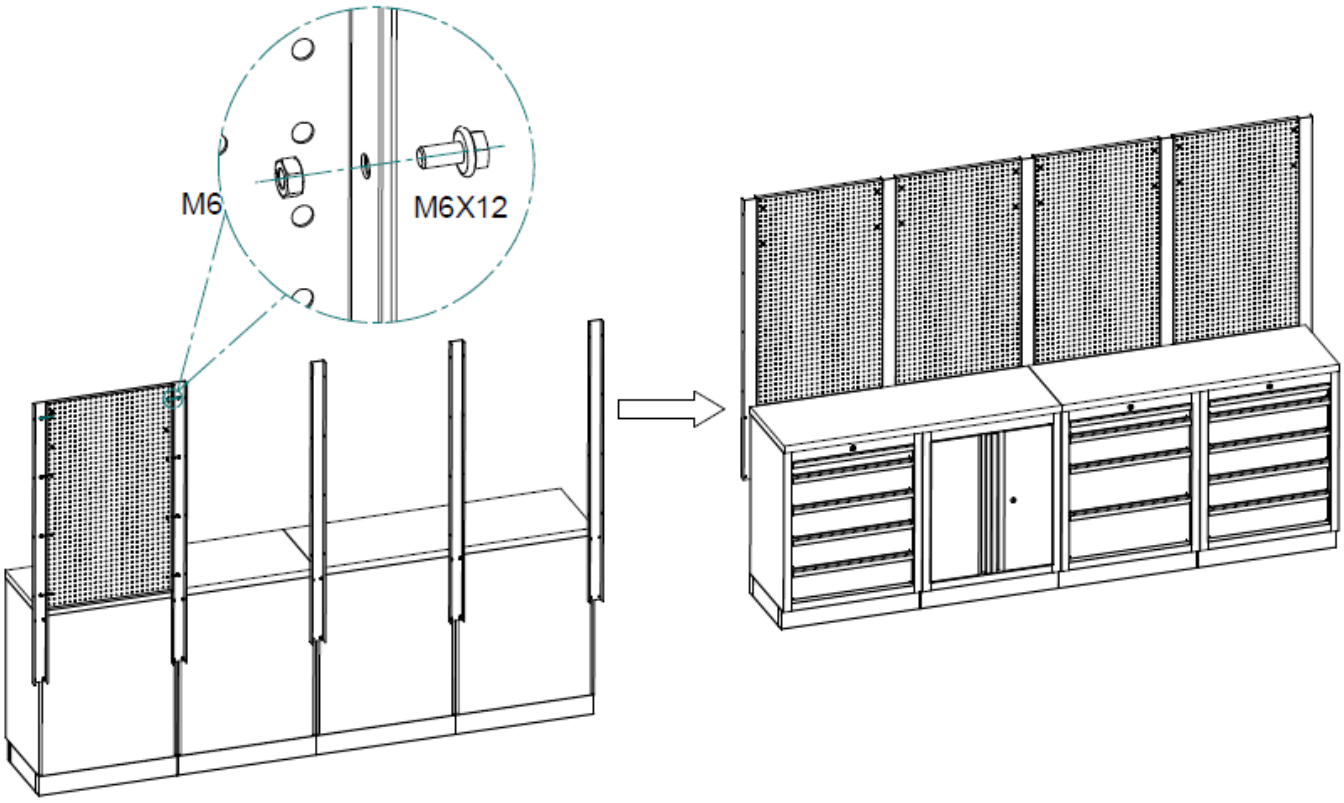
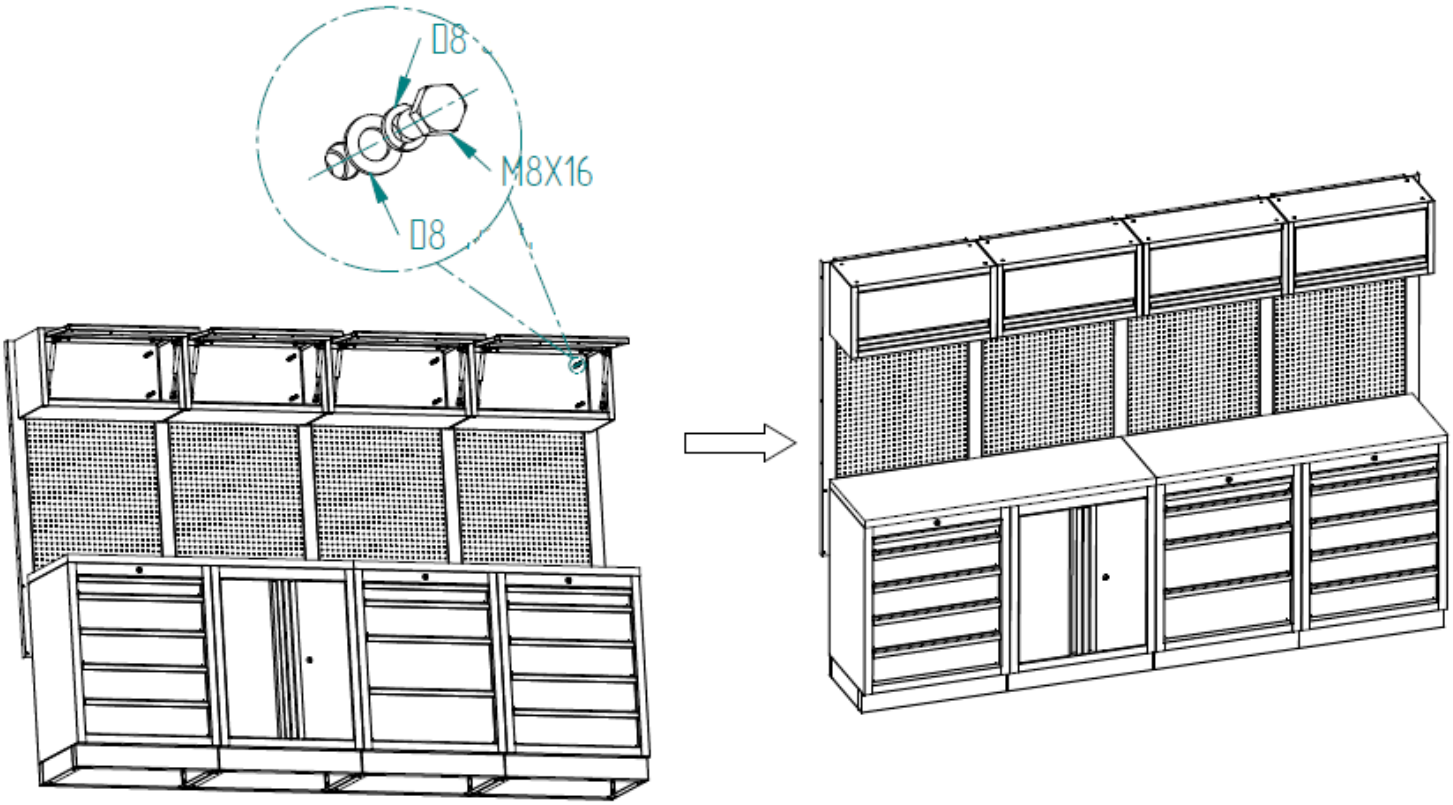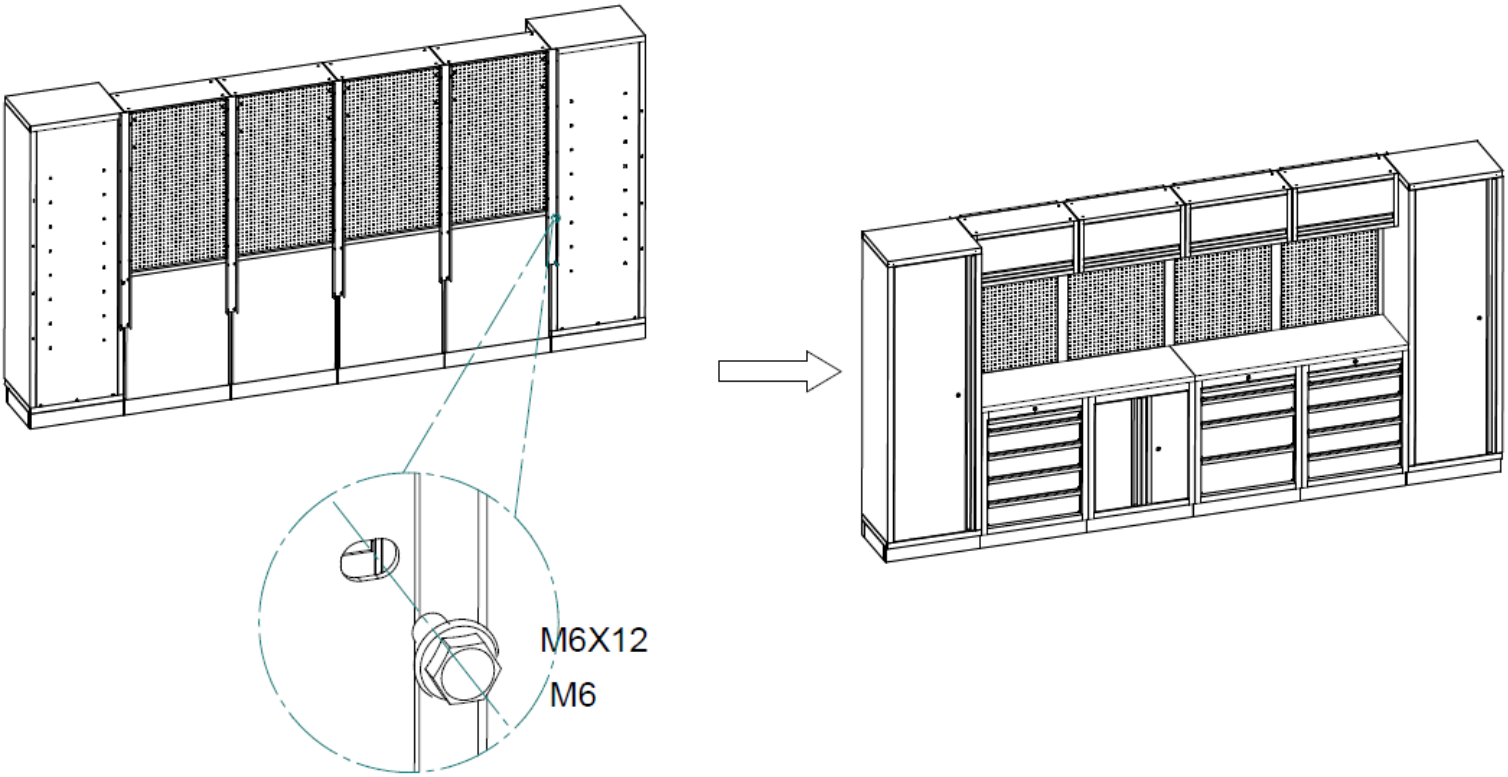
B2Bpartner