B2Bpartner

6100351

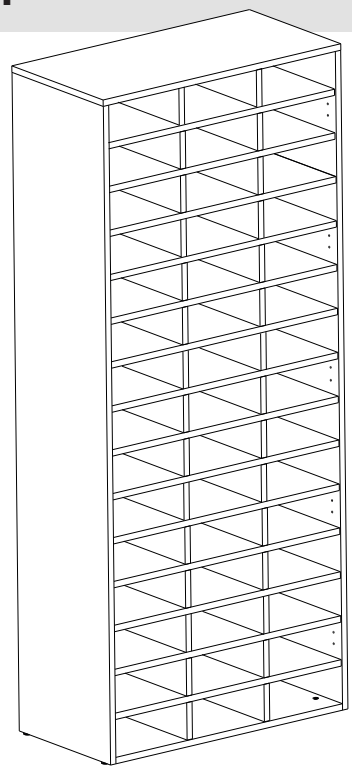

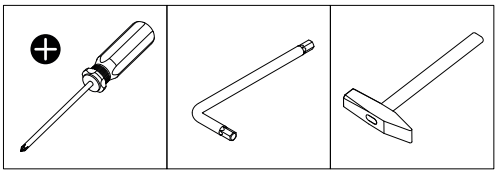

Ø8 × 35													
A	36×	B	24×	C	24×	D	1×	E	4×	F	4×	G	24×

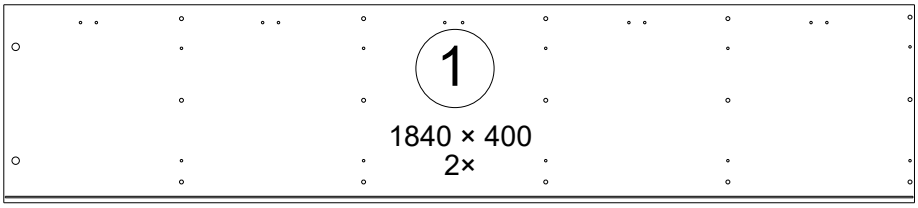

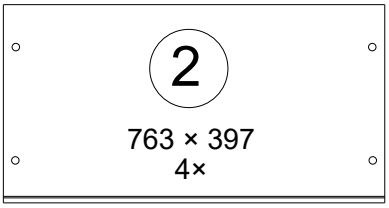

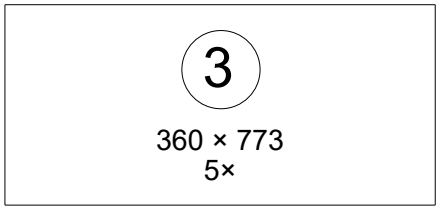

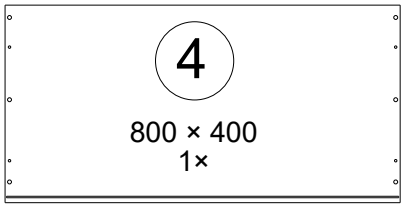

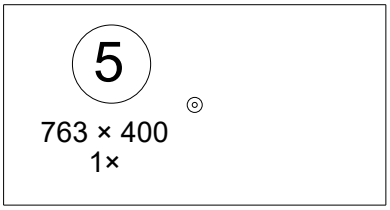

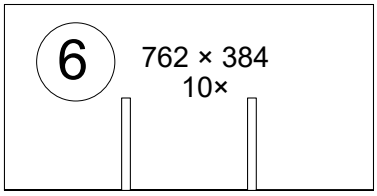

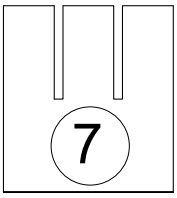

349 × 384
10×

1

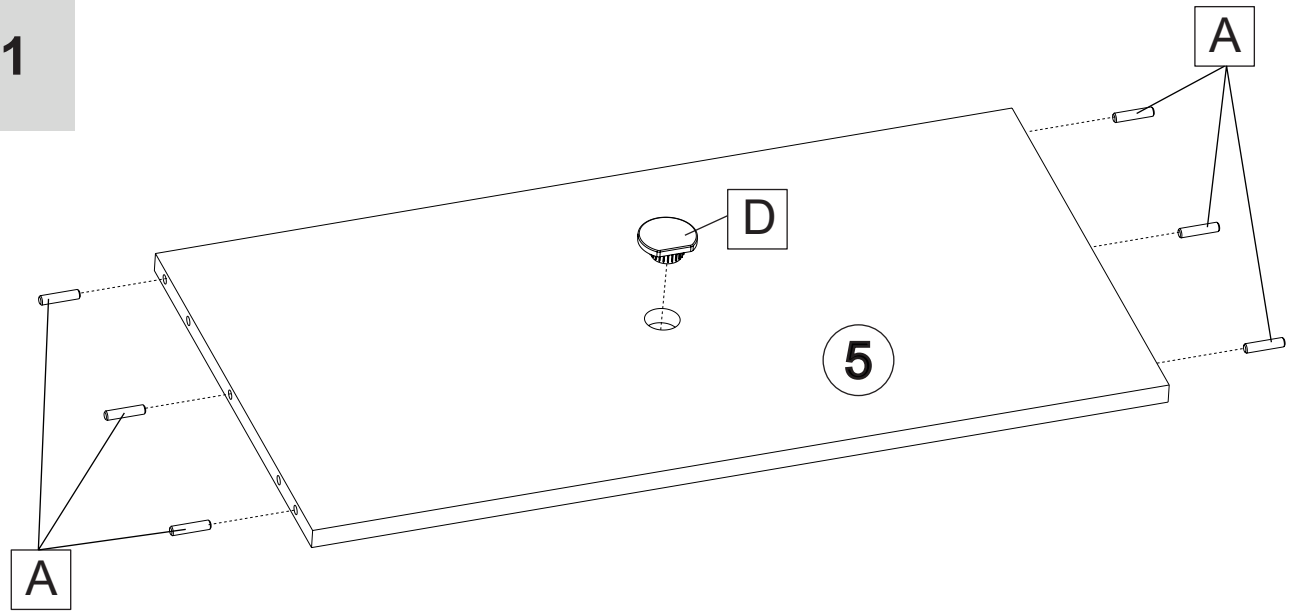

2

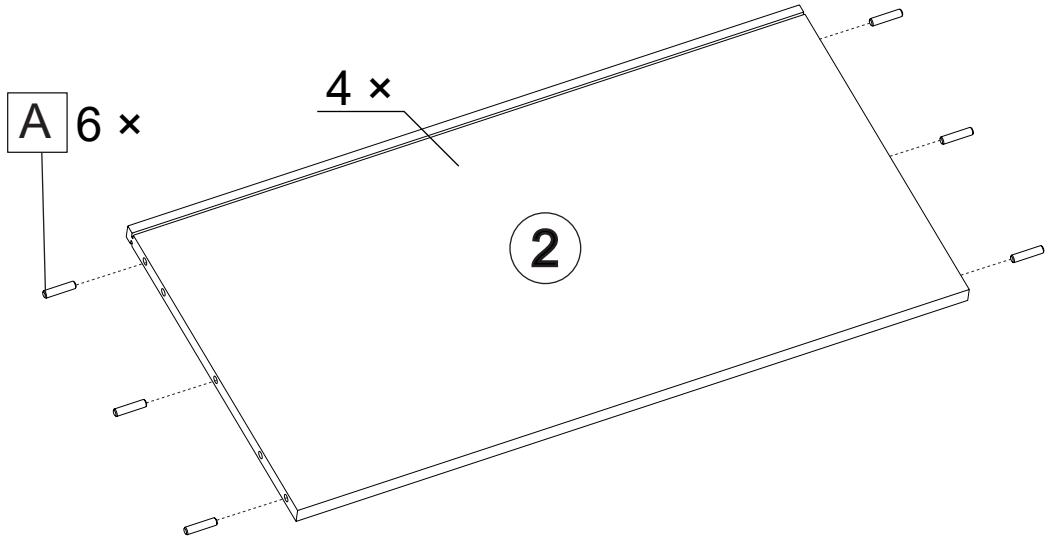

3

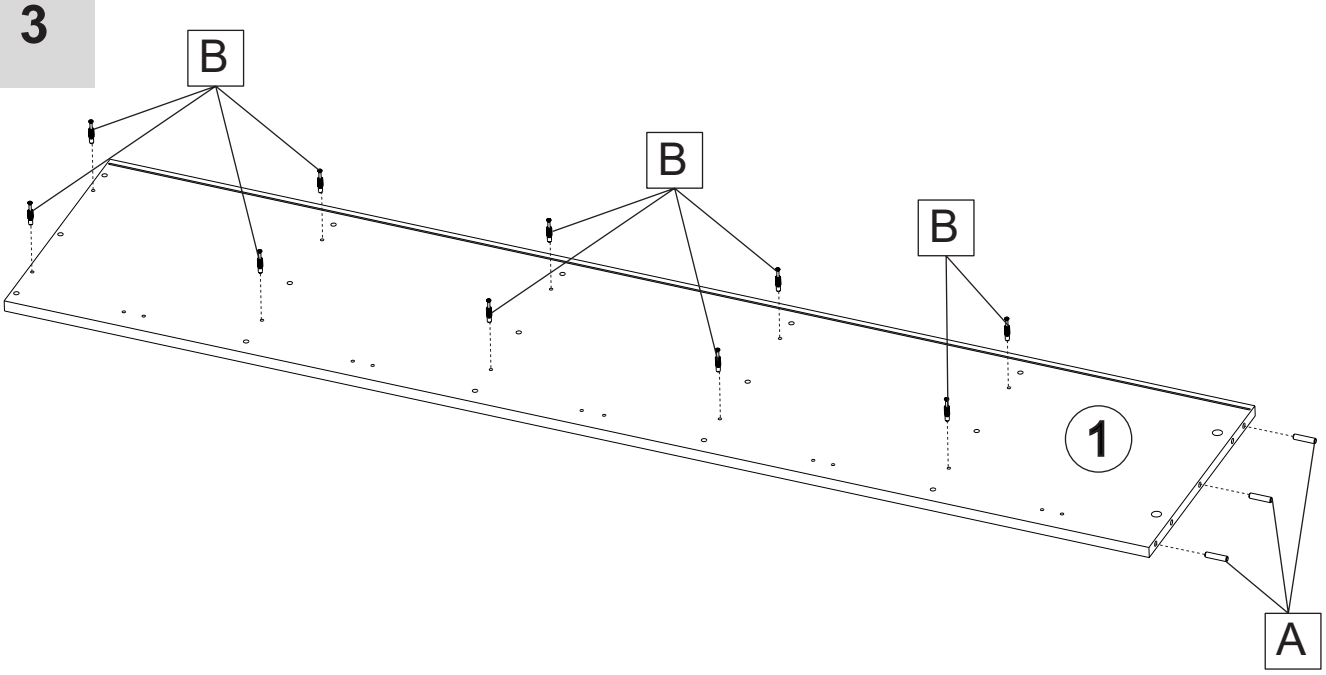

4

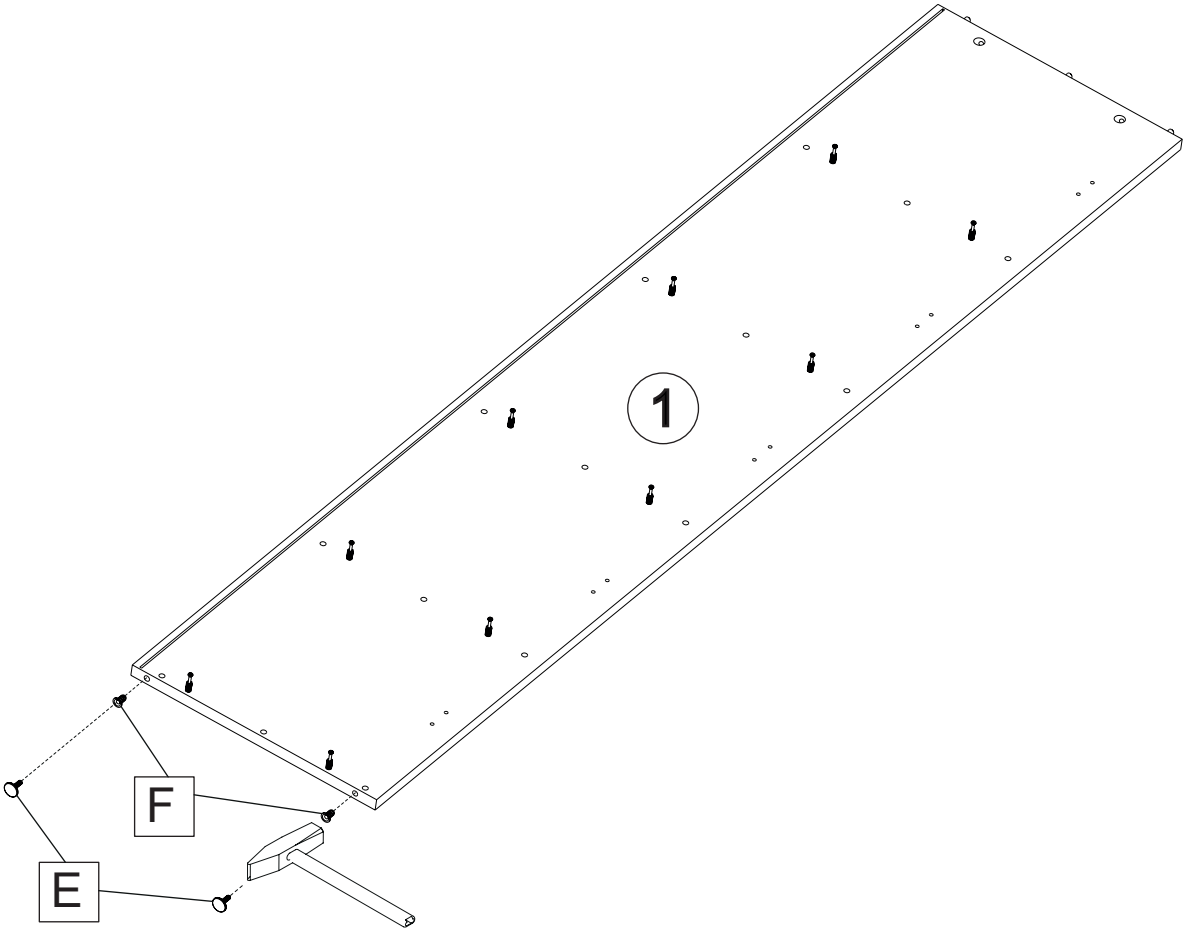

5

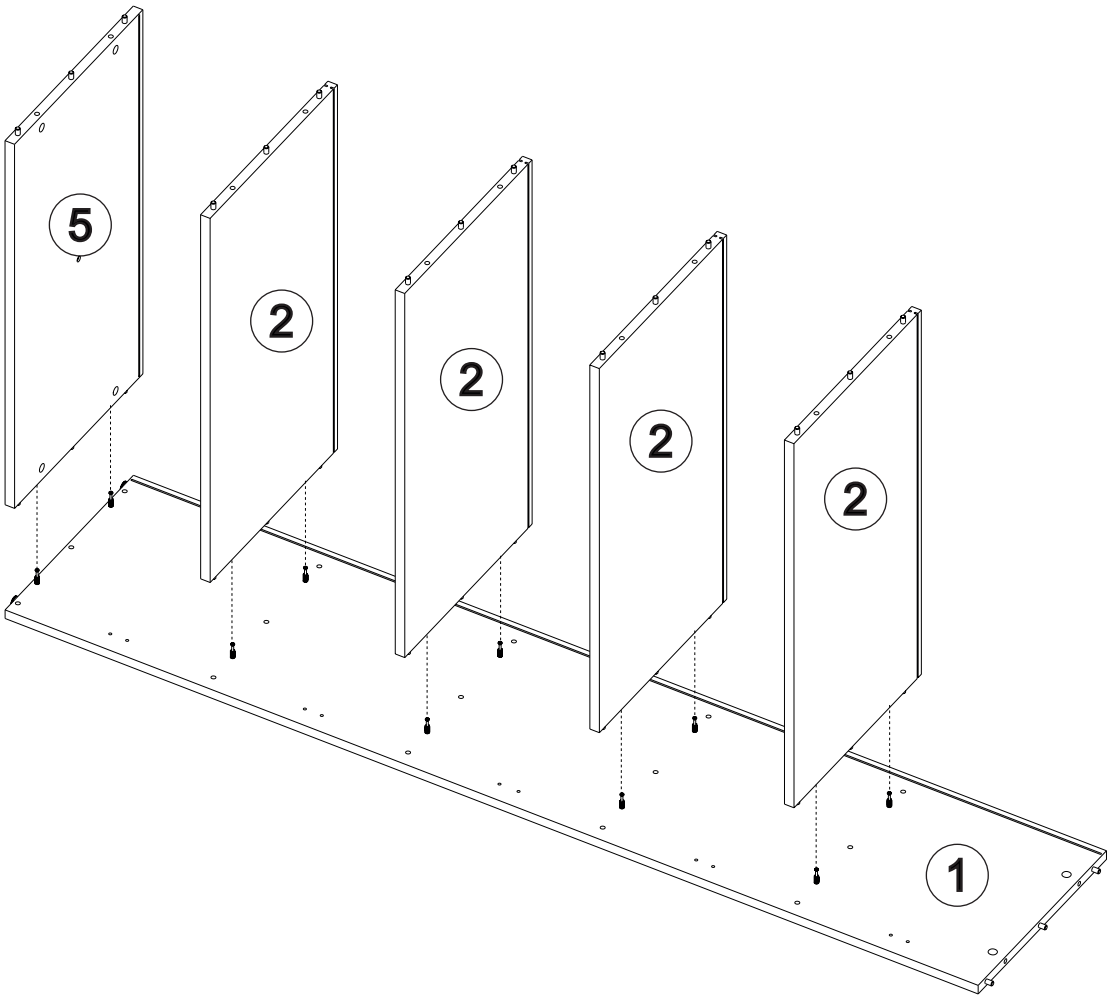

6

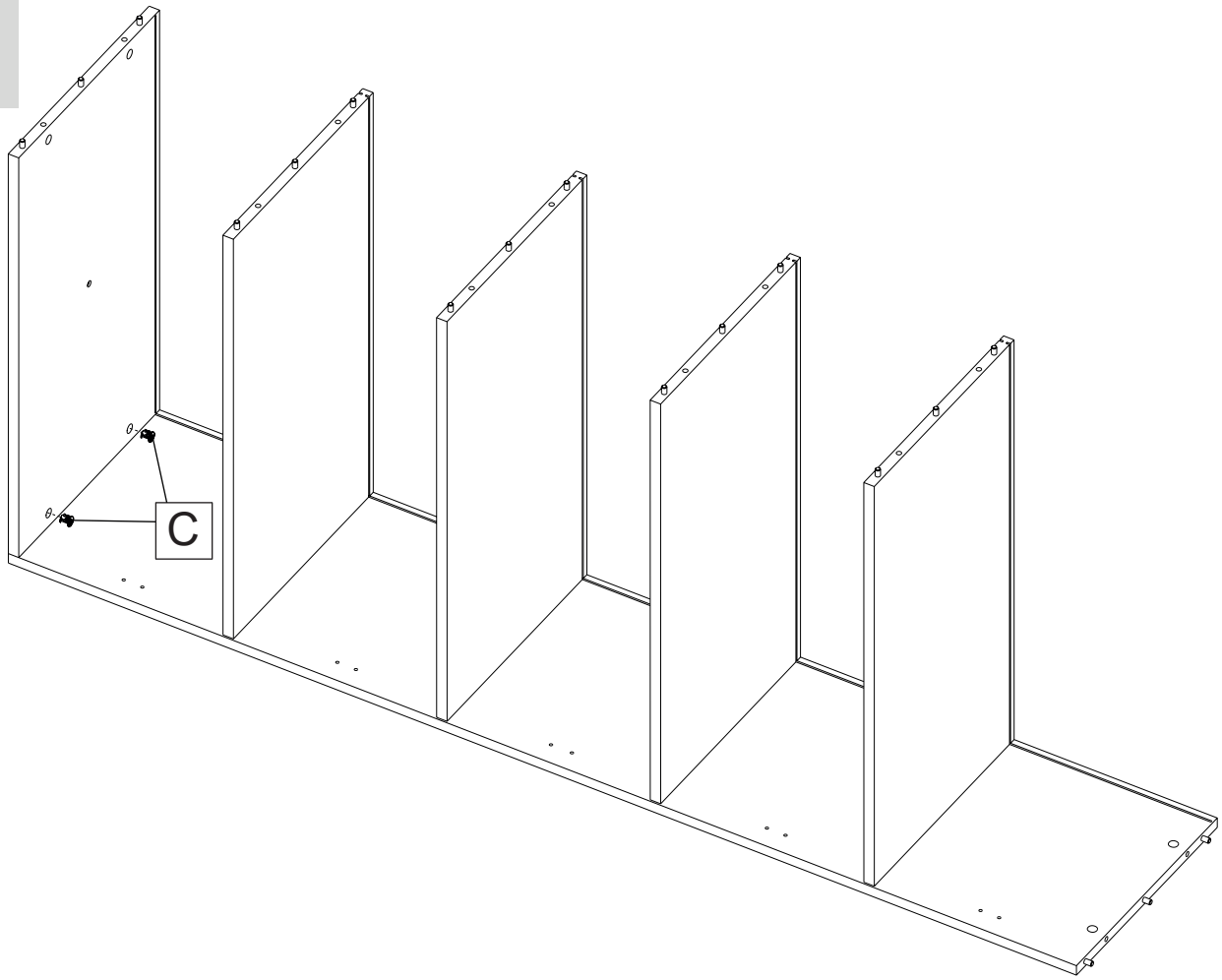

7

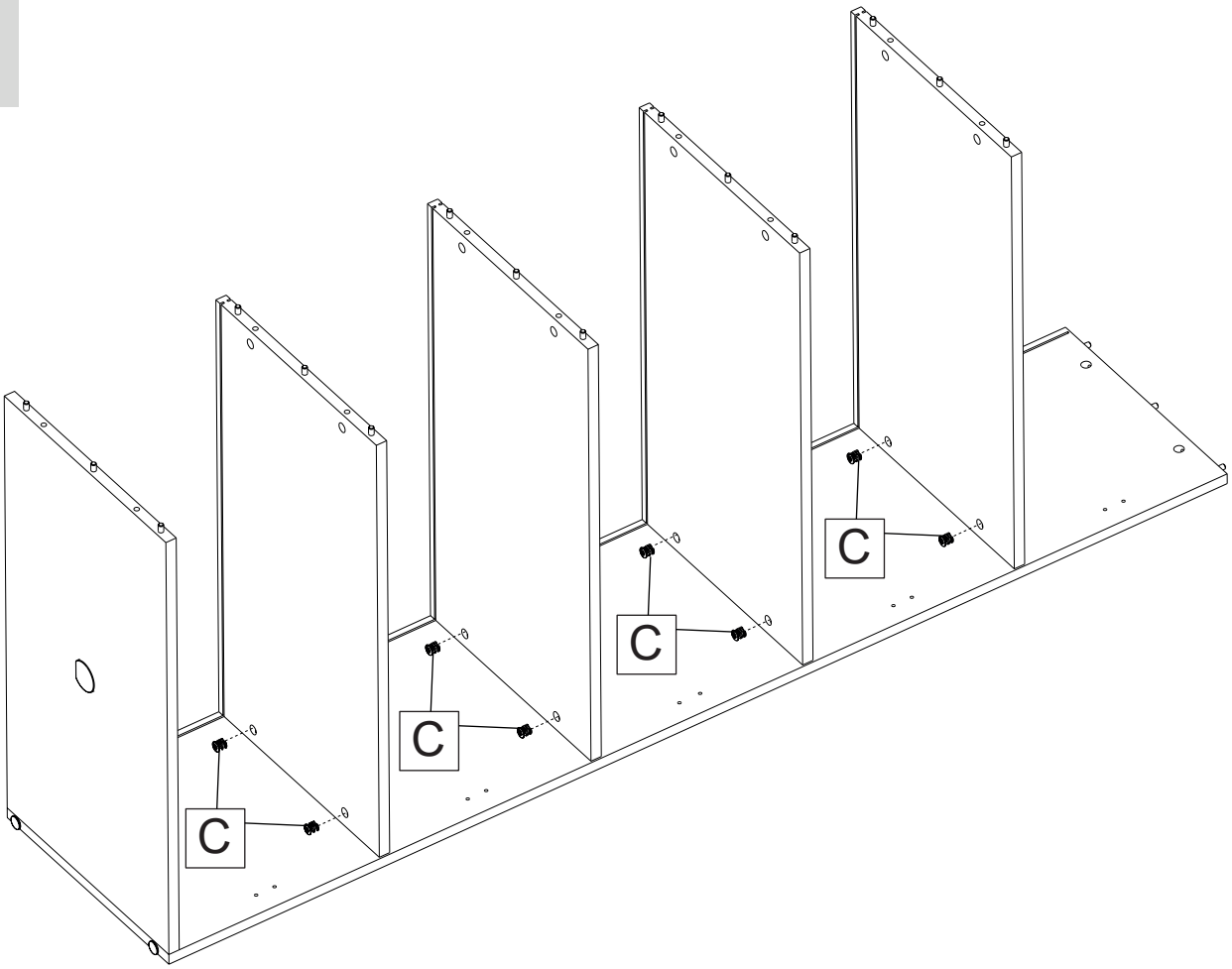

8

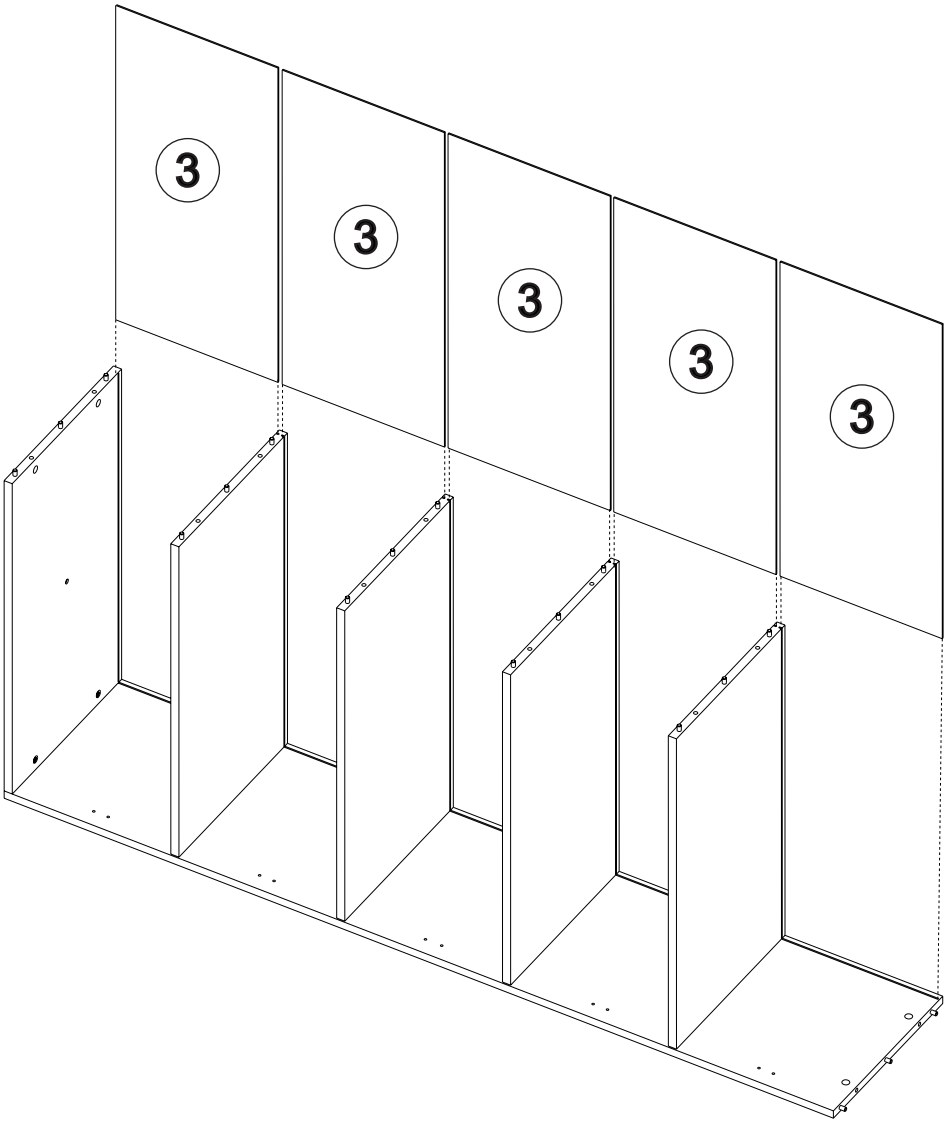

9

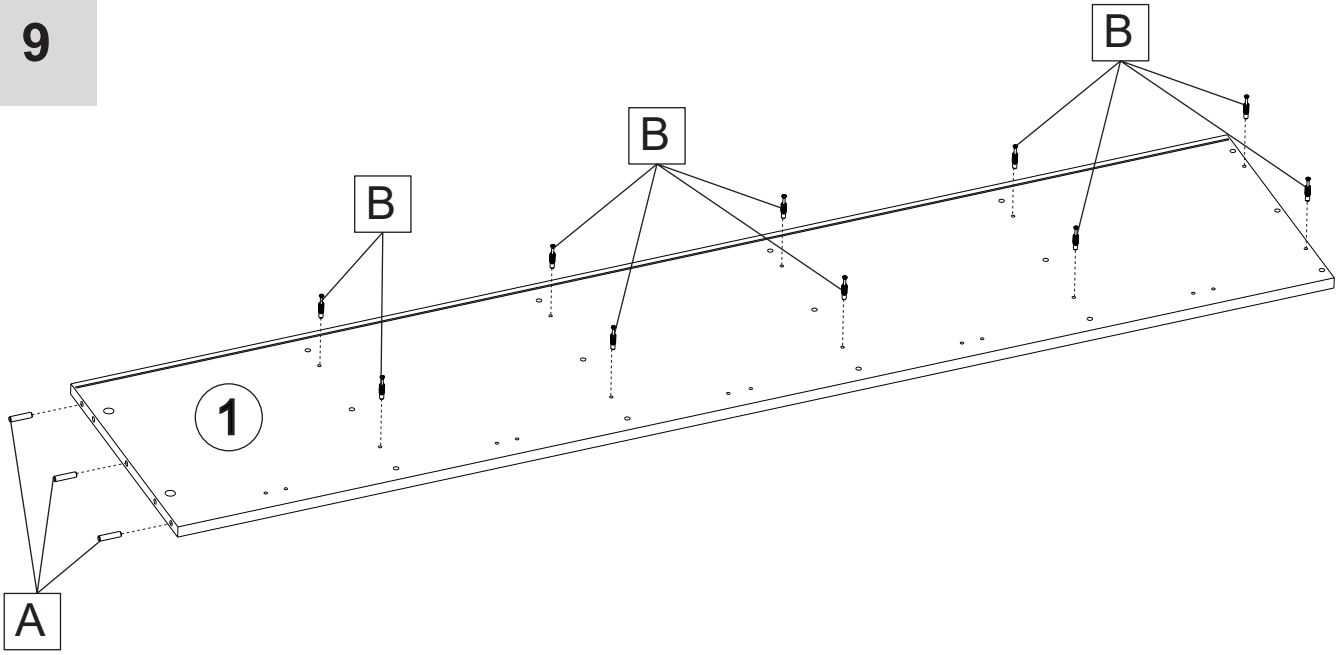

10

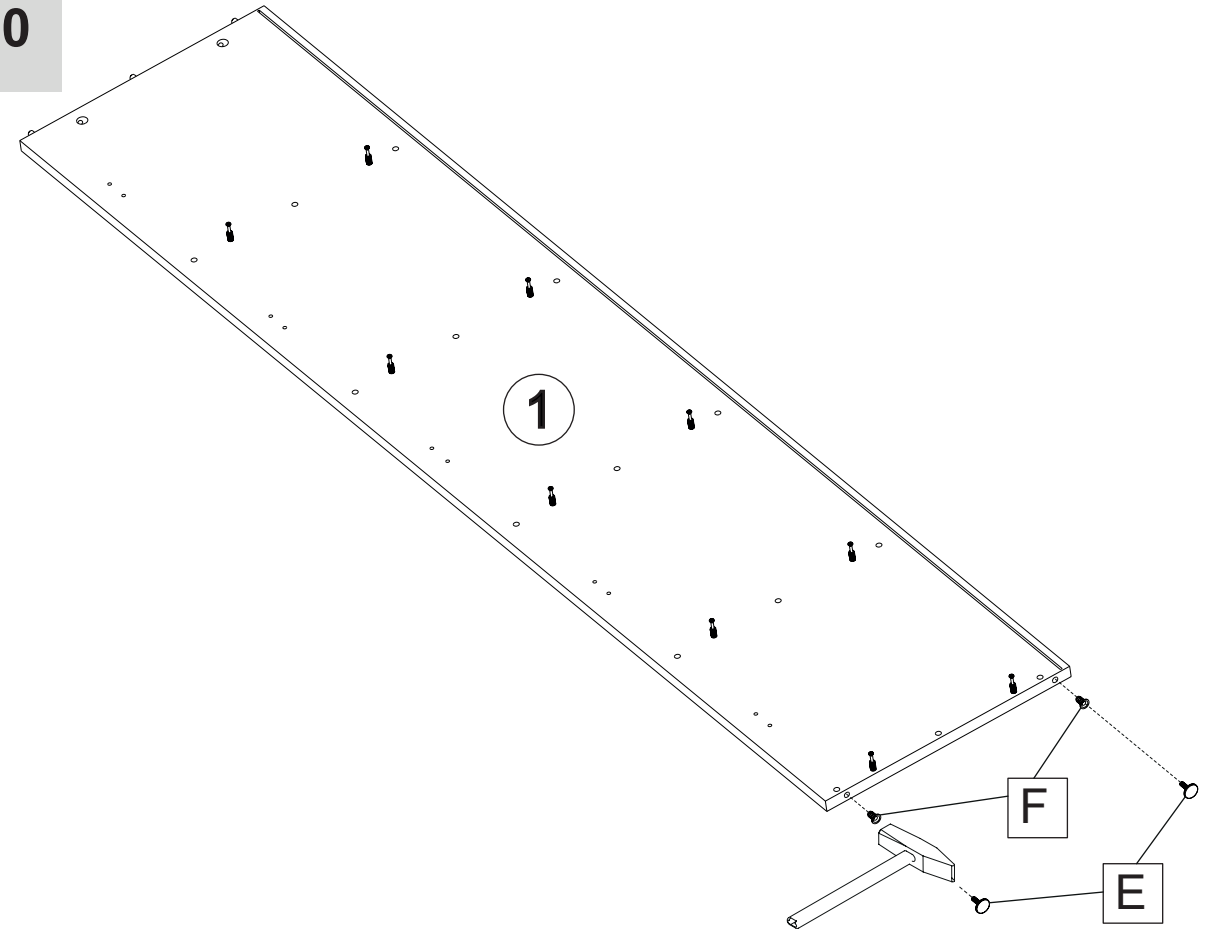

11

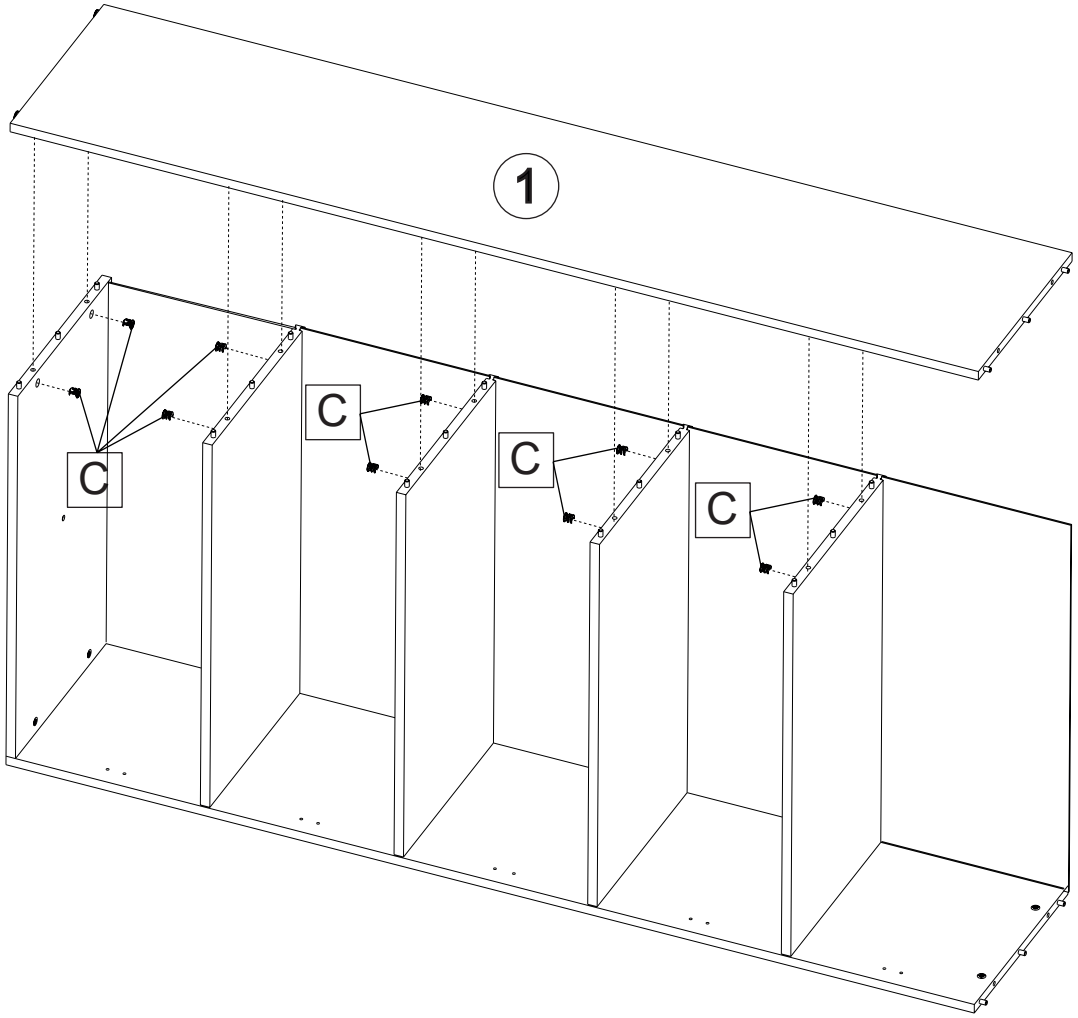

12

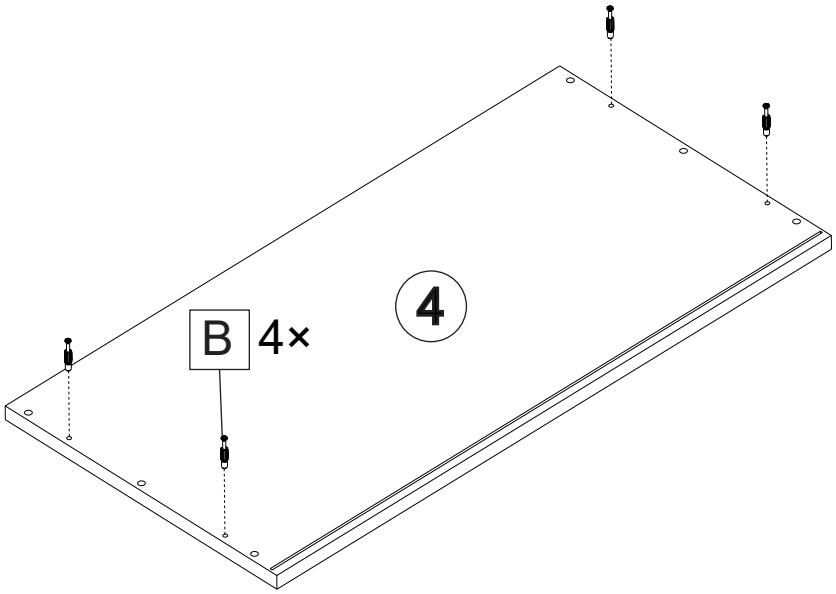

13

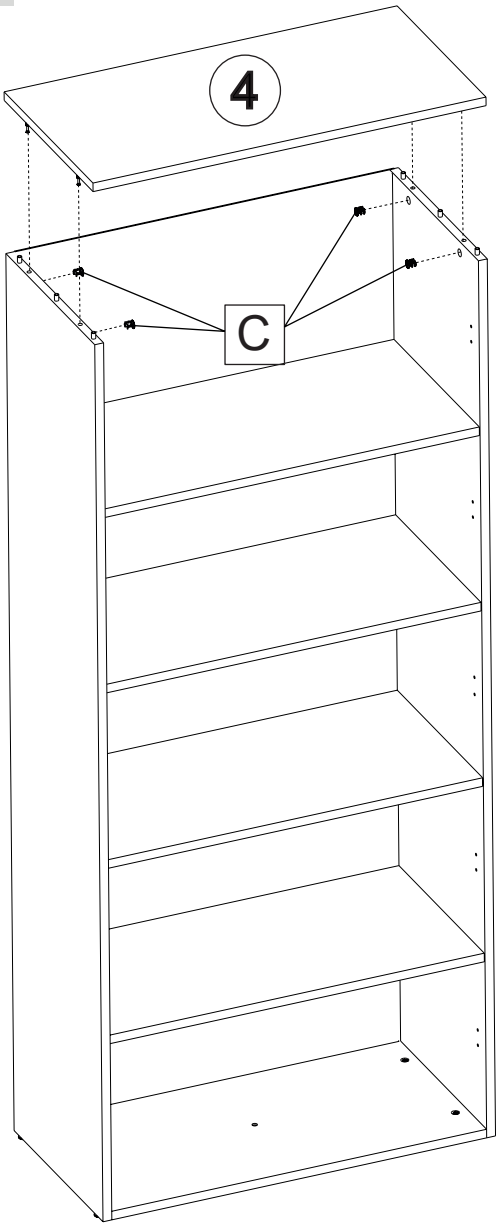

14

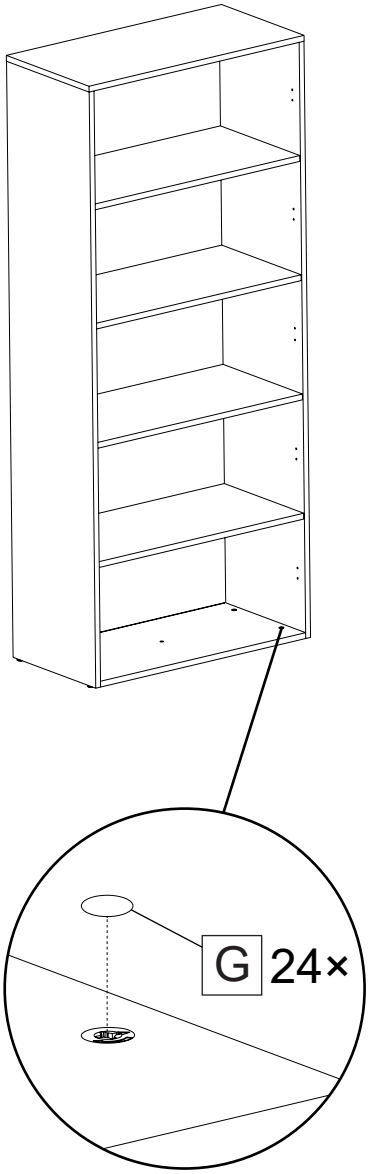

15

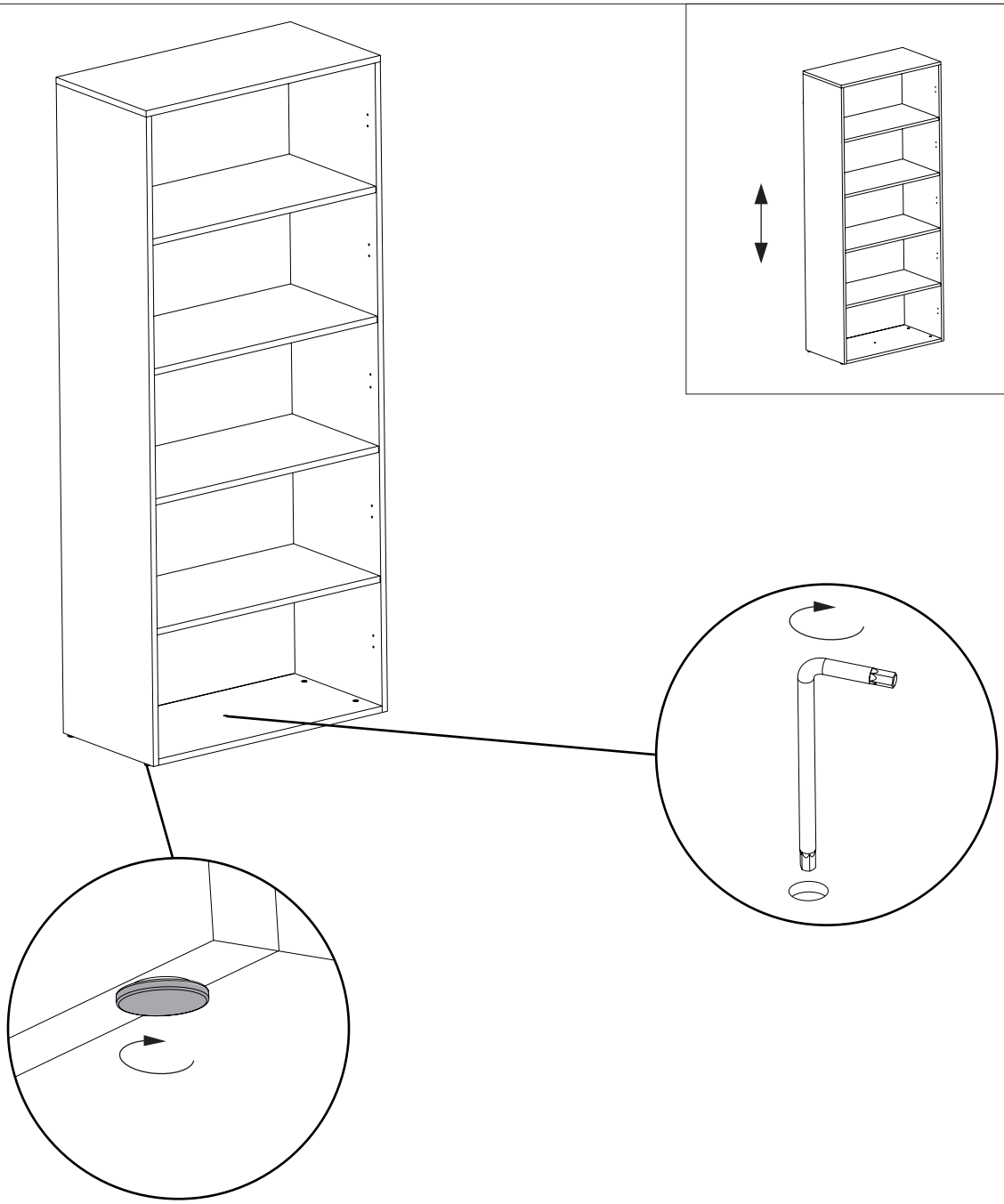

16

5×

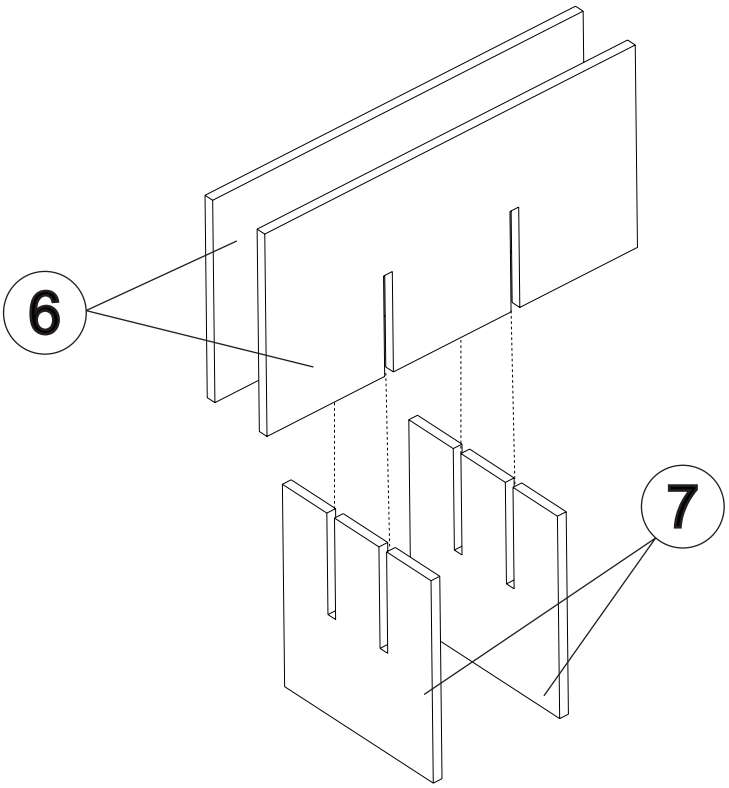
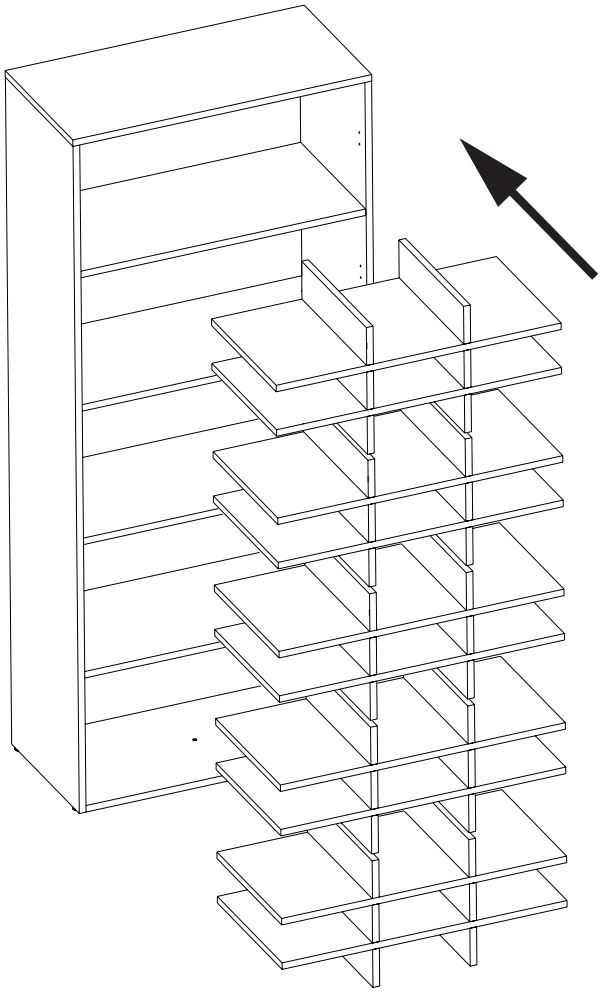
17